SERVICE MANUAL

REMOTE CONTROL

SANSUI RS-100

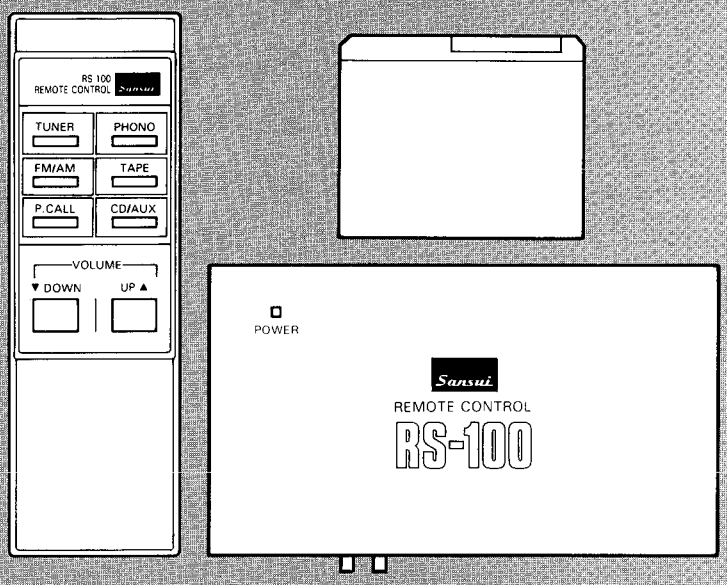

CAUTION

1. Parts identified by the ⚠ symbol on the schematic diagram and the parts list are critical for safety. Use only replacement parts that have critical characteristics recommended by the manufacturer.
2. Make leakage-current or resistance measurements to determine that exposed parts are acceptably insulated from the supply circuit before returning the appliance to the customer.

Sansui

SANSUI ELECTRIC CO., LTD.

•SPECIFICATIONS

Input sensitivity and impedance (1 kHz)
SOURCE IN..... 150 mV/100 kohms
Output level (1 kHz)
REC..... 150 mV
SOURCE OUT..... 85 mV
(Max. output level; 0.8V at 1 kHz, less than 0.5% total harmonic distortion)
Total harmonic distortion (1 kHz, 0.3V)
SOURCE IN..... 0.15%
Frequency response (0.5V)
SOURCE IN..... 10 Hz ~ 100 kHz, +1 dB, —2 dB
Signal to noise ratio (Short-circuit, A-network)
SOURCE IN..... 55 dB
Channel separation (1 kHz)
SOURCE IN..... 60 dB
Power requirements..... 110 ~ 120V/220 ~ 240V (50/60 Hz)
For U.S.A. and Canada ..... 120 V (60 Hz)
Power consumption..... 2 watts
Dimensions (Main unit)... 150 mm (5-15/16") W
60 mm (2-3/8") H
95 mm (3-3/4") D
Weight (Main unit)..... 0.6 kg (1.3 lbs) net

* Design and specifications subject to change without notice for improvements.
* Due to local laws and regulations, this unit sold in some areas are not equipped with variable voltage selectors

CAUTION

1. The symbols, UL, CSA, SA, BS, UK, EU, AS, XX <EXPORT> and XX-V <EXPORT(V)> on the parts list and the schematic diagram mean followings respectively.

   UL..... Manufactured for U.S.A market. (Underwriters Laboratories approved model.)
   CSA ..... Manufactured for Canadian market.
   SA..... Manufactured for South African market.
   BS, UK..... Manufactured for United Kingdom market.
   EU ..... Manufactured for European market.
   AS..... Manufactured for Australian market.
   XX <EXPORT>..... Standard Version with Inner Voltage Selector.
   XX-V <EXPORT(V)>.... Standard Version with Outer Voltage Selector.
   NON MARK ..... Common Parts.

2. Some printed circuit boards are not supplied as the assembled. To separate these in this service manual, the stock No's are not indicated at the ends of the board names. However, the individual parts on the circuit boards are provided by orders.

3. Since some of capacitors and resistors are omitted from parts lists in this service manual, refer to the Common Parts List for capacitors & resistors, which was issued on February 1983.

4. Abbreviations in this service manual are as follows.

•Abbreviations List

C.R.	: Carbon Resistor	E.B.L.	: Low Leak Bi-Polar Electrolytic Capacitor
S.R.	: Solid Resistor	Ta.C.	: Tantalum Capacitor
Ce.R.	: Cement Resistor	F.C.	: Film Capacitor
M.R.	: Metal Film Resistor	M.P.	: Metalized Paper Capacitor
F.R.	: Fusing Resistor	P.C.	: Polystyrene Capacitor
N.I.R.	: Non-Inflammable Resistor	G.C.	: Gimmic Capacitor
A.R.	: Array Resistor	A.C.	: Array Capacitor
C.C.	: Ceramic Capacitor	V.R.	: Variable Resistor
C.T.	: Ceramic Capacitor, Temperature Compensation	S.V.R.	: Semi Variable Resistor
E.C.	: Electrolytic Capacitor	SW.	: Switch
E.L.	: Low Leak Electrolytic Capacitor	Chip R.	: Chip Resistor
E.B.	: Bi-Polar Electrolytic Capacitor	Chip C.	: Chip Capacitor

1. BLOCK DIAGRAM

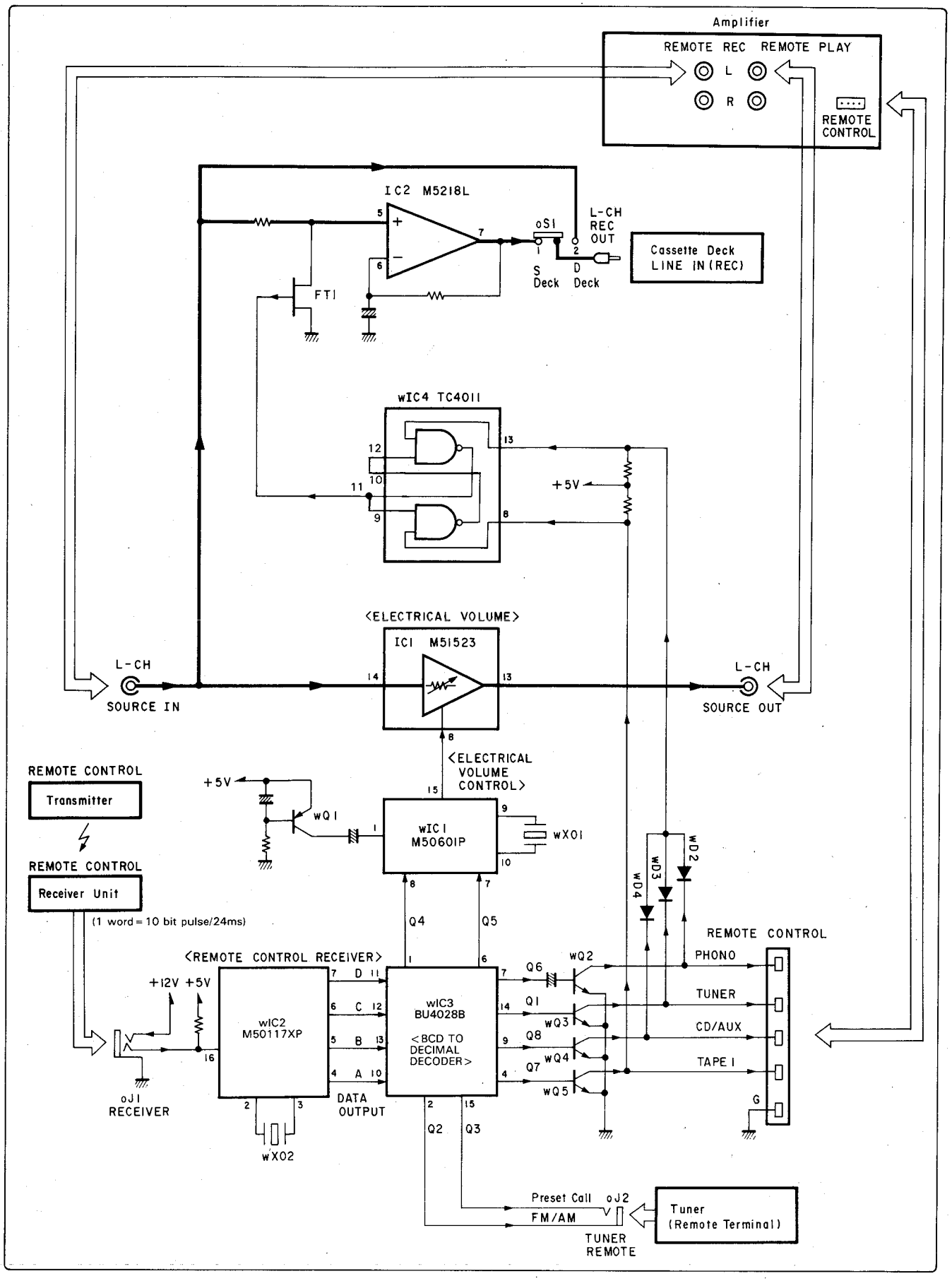

2. INTERIOR BLOCK DIAGRAM OF IC

•BU4028B (BCD TO DECIMAL DECODER IC)

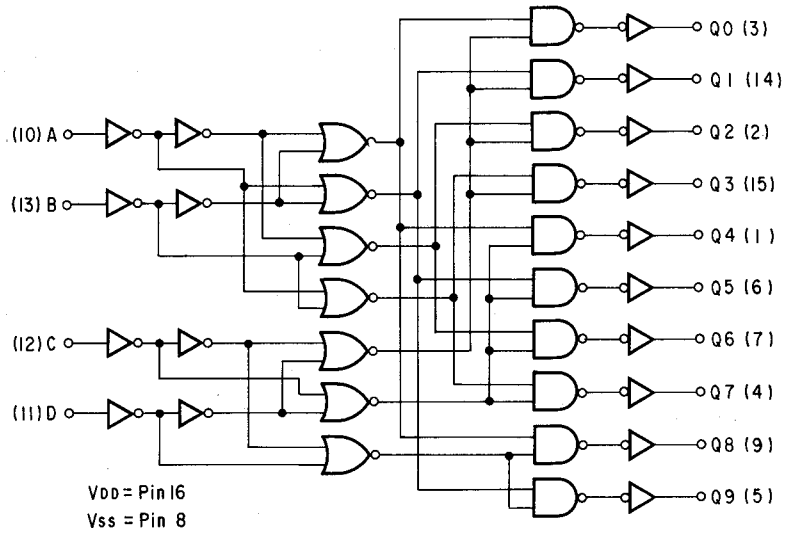

<TRUTH TABLE>

INPUT				OUTPUT									
D	C	B	A	Q9	Q8	Q7	Q6	Q5	Q4	Q3	Q2	Q1	Q0
L	L	L	L	L	L	L	L	L	L	L	L	L	H
L	L	L	H	L	L	L	L	L	L	L	L	H	L
L	L	H	L	L	L	L	L	L	L	L	H	L	L
L	L	H	H	L	L	L	L	L	L	H	L	L	L
L	H	L	L	L	L	L	L	L	H	L	L	L	L
L	H	L	H	L	L	L	L	H	L	L	L	L	L
L	H	H	L	L	L	L	H	L	L	L	L	L	L
L	H	H	H	L	L	H	L	L	L	L	L	L	L
H	L	L	L	L	H	L	L	L	L	L	L	L	L
H	L	L	H	H	L	L	L	L	L	L	L	L	L
H	L	H	L	L	L	L	L	L	L	L	L	L	L
H	L	H	H	L	L	L	L	L	L	L	L	L	L
H	H	L	L	L	L	L	L	L	L	L	L	L	L
H	H	L	H	L	L	L	L	L	L	L	L	L	L
H	H	H	L	L	L	L	L	L	L	L	L	L	L
H	H	H	H	L	L	L	L	L	L	L	L	L	L

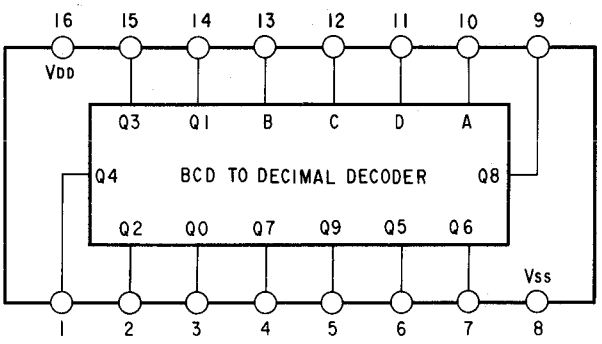

•TC4011RS (NAND1 ~ 4)

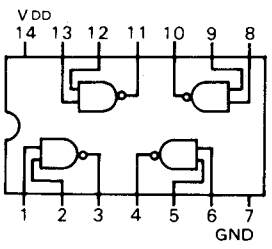

•M5218L (OP AMP. IC)

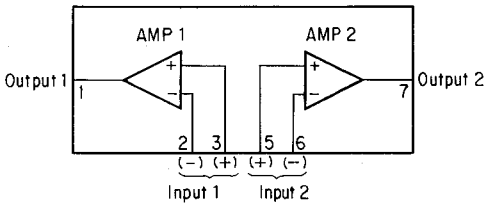

•M50601P (ELECTRONIC VOLUME CONTROL D/A CONVERTER IC)

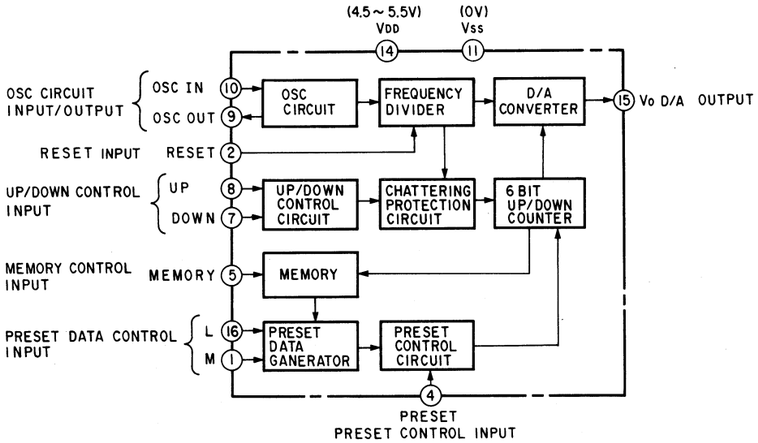

•M50117XP (30~120 FUNCTION REMOTE-CONTROL RECEIVER)

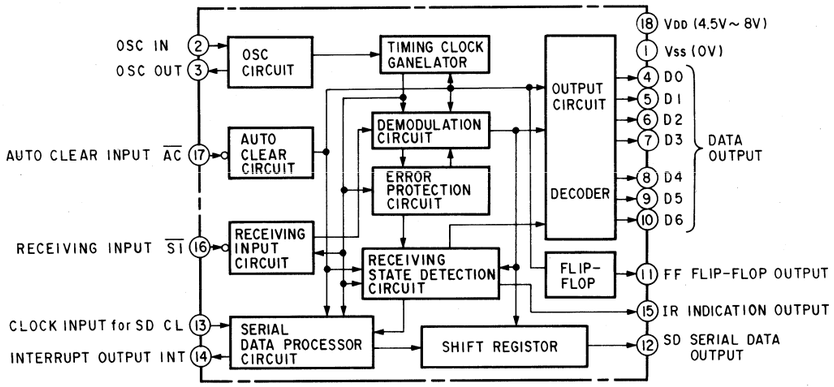

•M51523L (ELECTRICAL VOLUME IC)

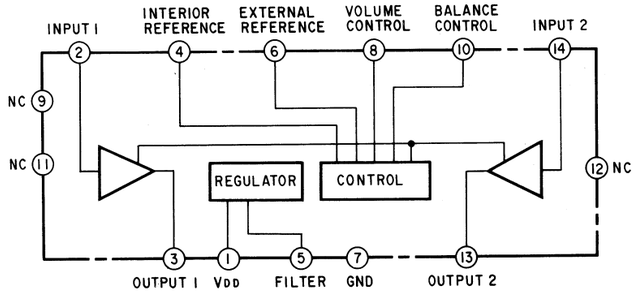

•SCHEMATIC DIAGRAM OF REMOTE CONTROL RECEIVER

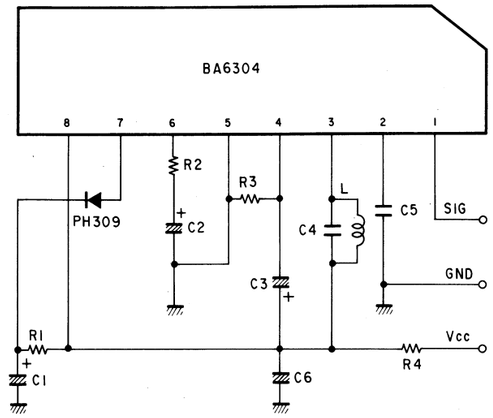

•SCHEMATIC DIAGRAM OF TRANSMITTER

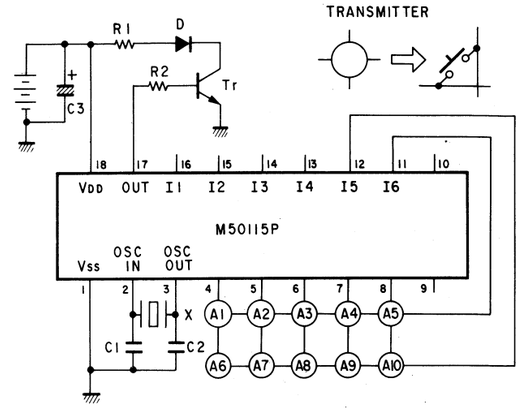

A1 : TUNER
A2 : FM/AM
A3 : PRESET CALL
A4 : VOLUME UP
A5 : VOLUME DOWN
A6 : PHONO
A7 : TAPE
A8 : CD/AUX

•BA63040 (REMOTE CONTROL RECEIVER IC)

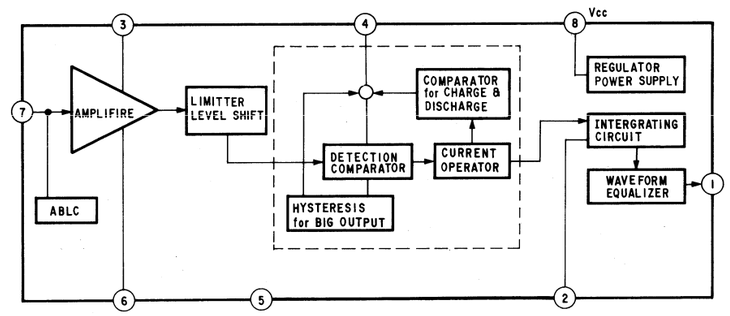

•M50115P (REMOTE CONTROL TRANSMITTER IC)

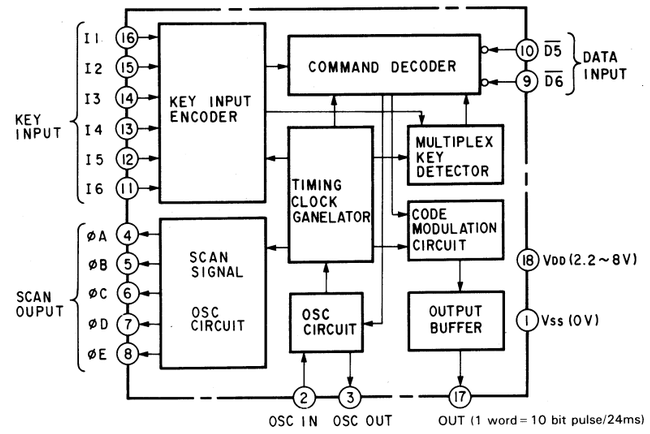

3. OTHER PARTS

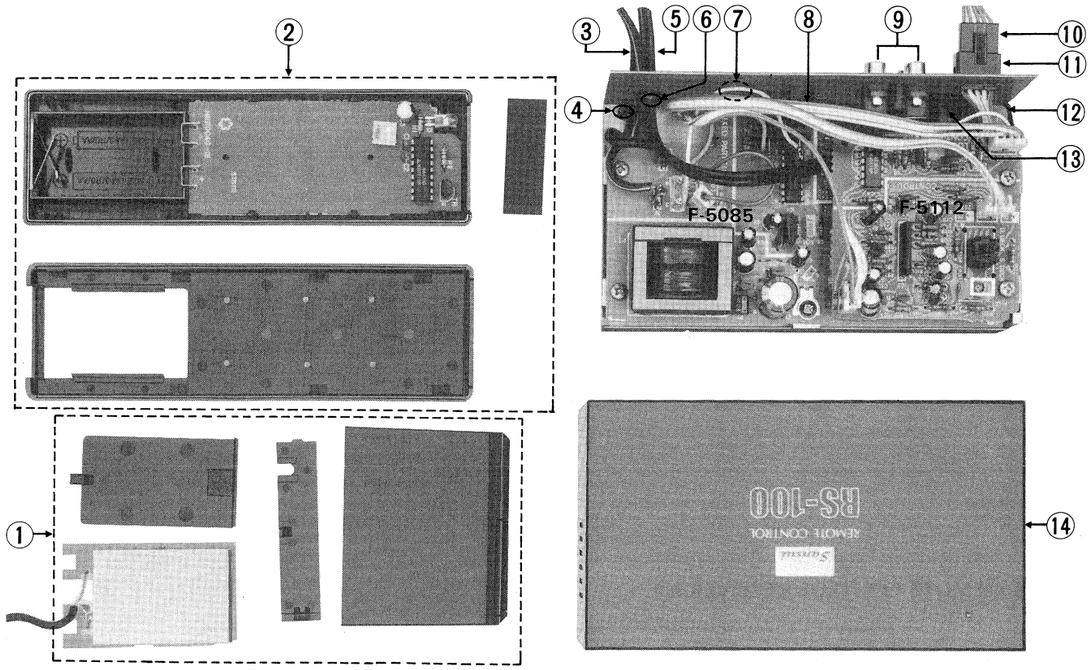

Parts List

Parts No.	Stock No.	Description
1	———	Remote Control Unit, RECEIVER
2	———	Remote Control Unit, TRANSMITTER
⚠ 3	38005400	Power Supply Cord <XX, XX-V>
⚠	48187600	Power Supply Cord <CSA>
⚠	38004500	Power Supply Cord <EU>
⚠	38004300	Power Supply Cord <BS, UL>
⚠	07204200	Power Supply Cord <AS>
4	39106000	Strain Relief <XX, XX-V, CSA, UL>
	39104900	Strain Relief <EU, BS, AS>
5	48238400	Output Cord (REC)
6	39106000	Strain Relief
7	46533500	Slide SW., Voltage Selector <XX-V>
⚠ 8	48184000	AC Outlet <CSA>
⚠	46161000	AC Outlet <EU>
⚠	46364800	AC Outlet <BS>
⚠	46580600	AC Outlet <AS>
⚠	46364900	AC Outlet <XX, UL>
9	46363800	4P Sound Terminal
10	48197700	Remote Control Cable, 80 cm
11	16416500	Remote Control Socket
12	48223700	MIN. Jack, RECEIVER
13	46547200	MIN. Jack, TUNER REMOTE
14	47913800	Bonnet

4. PARTS LOCATION & PARTS LIST

4-1. F-5085 Remote Control Receiver Board (Stock No. 00907001)

Component Side

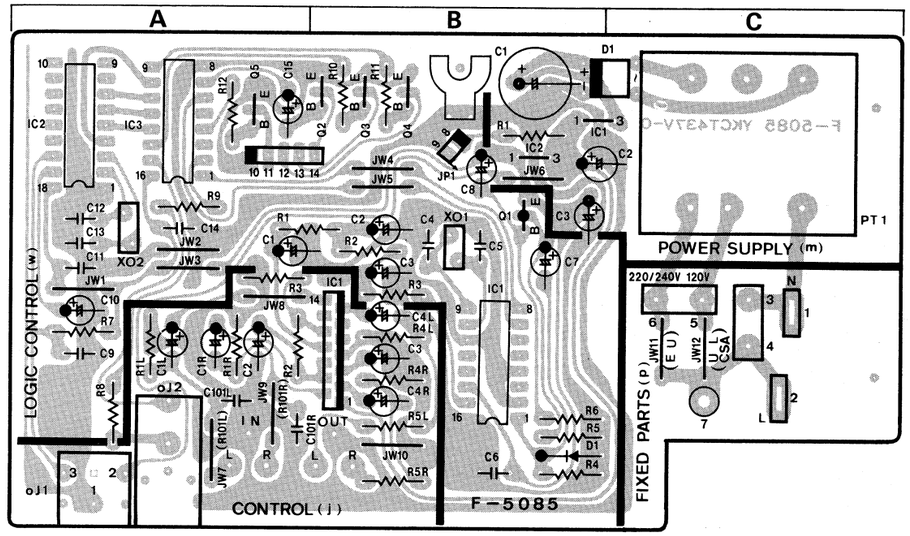

Parts List

Parts No.	Stock No.	Description
•IC		
jIC1	48223500	M51523L
⚠mIC1	46614700	NJM78L12
⚠	or 48066100	M5278L12
⚠mIC2	46148600	NJM78L05A
⚠	or 48065800	M5278L05
•Diode		
⚠mD1	46273600	DBB10-B
⚠mPT1	15021401	Power Transformer <XX, XX-V>
⚠	15021402	Power Transformer <UL, CSA>
⚠	15021405	Power Transformer <EU, BS, AS>
oJ1	48223700	Mini Jack, RECEIVER
oJ2	46547200	Mini Jack, TUNER REMOTE
	46363800	4P SOURCE Terminal
•Transistor		
wQ1	46367201	2SA1048
	or 46367001	2SA1115
wQ1	46392001	2SA1175
	or 48058601	2SA933S
wQ2	48171600	DTC114YS
wQ3	46367301	2SC2458
	or 46367101	2SC2603
	or 46391901	2SC2785
	or 48058801	2SC1740S
wQ4	46367301	2SC2458
	or 46367101	2SC2603
	or 46391901	2SC2785
	or 48058801	2SC1740S
wQ5	46367301	2SC2458
	or 46367101	2SC2603
	or 46391901	2SC2785
	or 48058801	2SC1740S
•IC		
wIC1	46361900	M50601P
wIC2	48223600	M50117P
wIC3	48223400	μPD4028BC
	or 48223300	TC4028BP
	or 48223200	BU4028B
wXD1	48224400	KBR-550B, Quartz Element
wXD2	48224300	KBR455, Quartz Element
•Diode		
wD1	03117600	1S2473T77
	or 46086000	1S1588TP-3

► to be continued on page 7

5. SECHEMATIC DIAGRAM

*Design and specifications subject to change without notice for improvement.
*La présention et les spécifications sont susceptibles d'être modifiées sans préavis par suites d'améliorations éventuelles.
*Änderungen, die dem technischen Fortschritt dienen, bleiben vorbehalten.

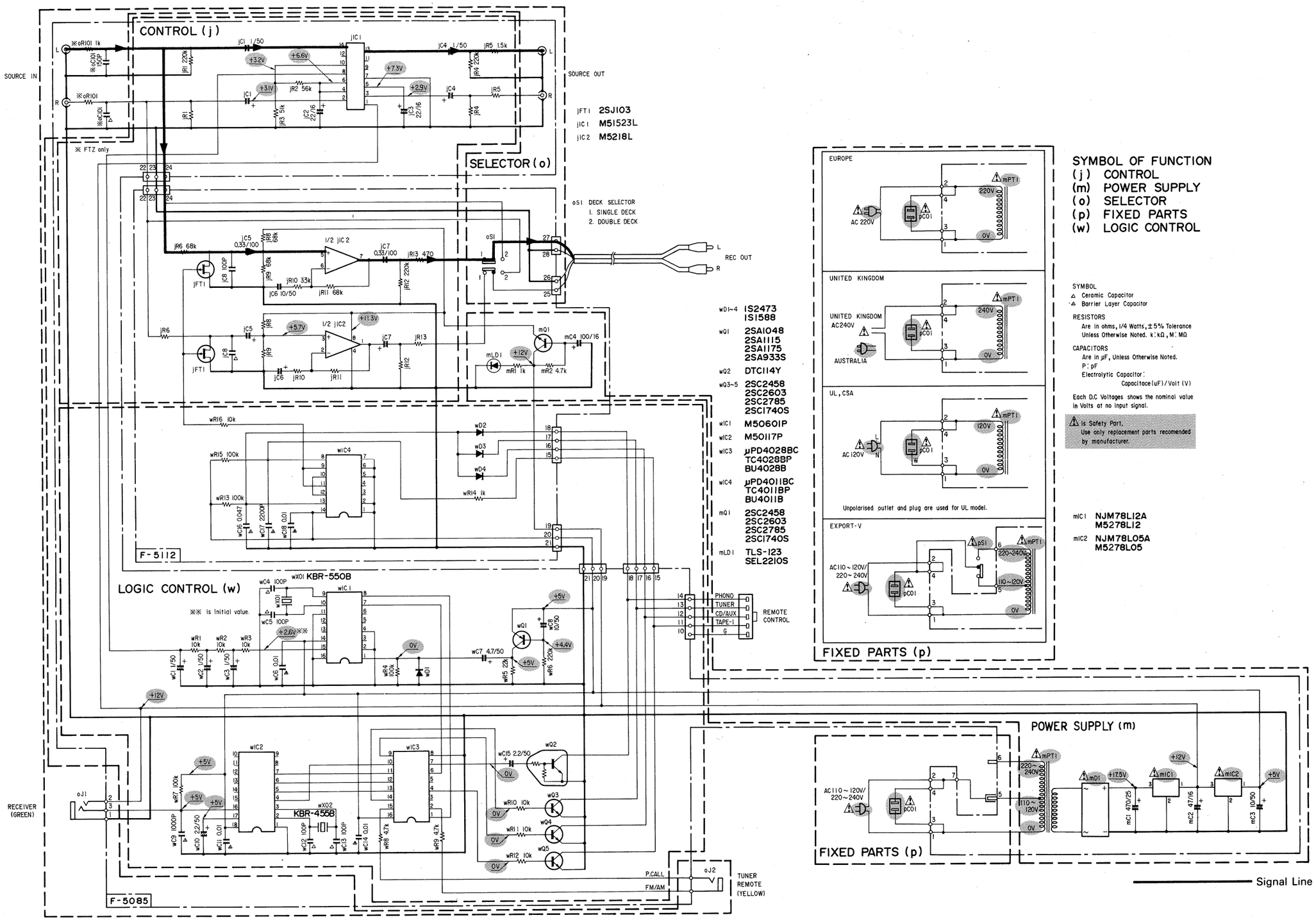

SYMBOL OF FUNCTION
(j) CONTROL
(m) POWER SUPPLY
(o) SELECTOR
(p) FIXED PARTS
(w) LOGIC CONTROL

SYMBOL
⚠ Ceramic Capacitor
⚠ Barrier Layer Capacitor

RESISTORS
Are in ohms, 1/4 Watts, ±5% Tolerance
Unless Otherwise Noted. k: kΩ, M: MΩ

CAPACITORS
Are in μF, Unless Otherwise Noted.
P: pF
Electrolytic Capacitor:
Capacitace(uF)/Volt (V)

Each D.C Voltages shows the nominal value in Volts at no input signal.

⚠ is Safety Part.
Use only replacement parts recomended by manufacturer.

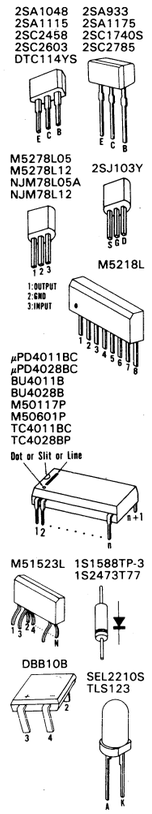

4-2. F-5112 Cassette Line Amp. Board (Stock No. 00914701)

Component Side

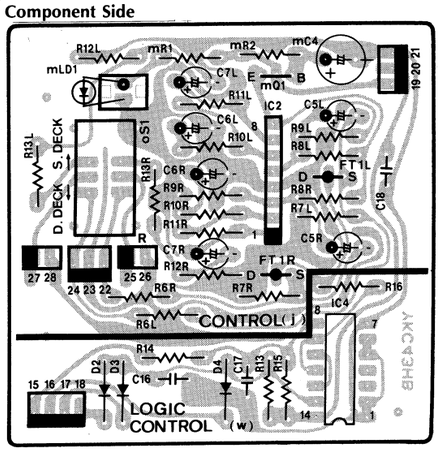

Parts List

Parts No.	Stock No.	Description
•FET		
jFT1	46643800	2SJ103-Y
	or 46643801	2SJ103-GR
	or 46643802	2SJ103-BL
	or 46421200	2SJ103-Y
	or 46421201	2SJ103-GR
	or 46421202	2SJ103-BL
•IC		
jIC2	46147700	M5218L
•Transistor		
mQ1	46367301	2SC2458
	or 46367101	2SC2603
	or 46391901	2SC2785
	or 48058801	2SC1740S
•LED		
mLD1	46176900	TLS-123
	or 46470200	SEL2210S
•IC		
wIC4	46427200	μPD4011BC
	or 48063700	BU4011B
	or 03604100	TC4011P
•Diode		
wD2	03117600	1S2473T77
	or 46086000	1S1588TP-3
	or 03117600	1S2473T77
	or 46086000	1S1588TP-3
wD4	03117600	1S2473T77
	or 46086000	1S1588TP-3

6. PACKING LIST

Parts No.	Stock No.	Description
1	47934100	Vinyl Cover
2	47913700	Styrofoam Packing
3	47914100	Carton Case <XX, UL, CSA, EU, BS, AS>
	47933800	Carton Case <XX-V>

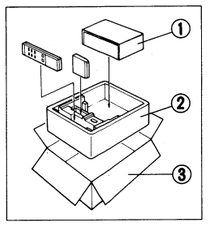

7. ACCESSORY LIST

Stock No.	Description
48197700	Remote Control Cable 80 cm
38103300	Pin Plug Cord, 108 cm
or 07193400	Pin Plug Cord, 100 cm
48181700	Mini Pin Plug Cord, TUNER REMOTE
46979200	Operating Instruction
46983200	Caution Sheet 2
46983100	Caution Sheet 1 <EU>

Sansui

SANSUI ELECTRIC CO., LTD.: 14-1, Izumi 2-chome, Suginami-ku, Tokyo 168 Japan
PHONE: (03) 324-8891/TELEX: 232-2076 (International Division)
SANSUI ELECTRONICS CORPORATION: 1250 Valley Brook Ave. Lyndhurst, N.J. 07071 U.S.A.
17150 South Margay Ave. Carson, California 90746 U.S.A.
3036 Koapaka Street. Honolulu, Hawaii 96819 U.S.A.
SANSUI ELECTRONICS (U.K.) LTD.: Unit 10A, Lyon Industrial Estate, Rockware Avenue, Geenford, Middx UB6, OAA, England
SANSUI ELECTRONICS G.M.B.H.: Pau Ehrich Strasse 8, 6074 Rödermark 2, West Germany

(SM1-231) Printed in Japan (254120M) <Stock No. 36515400>